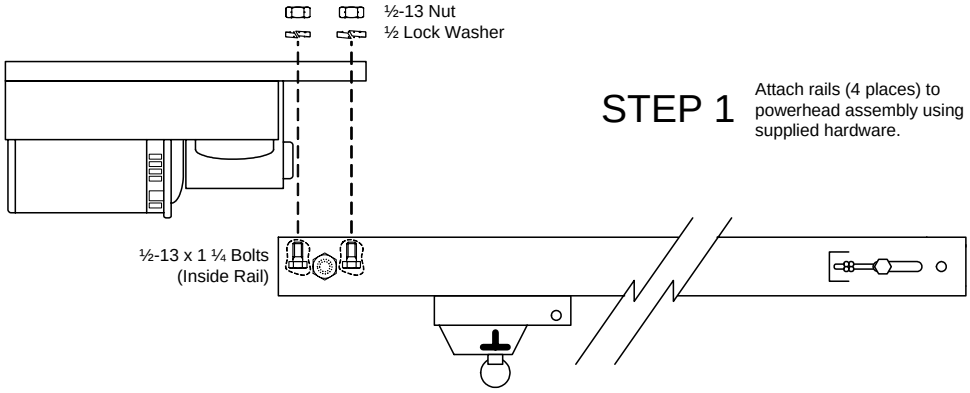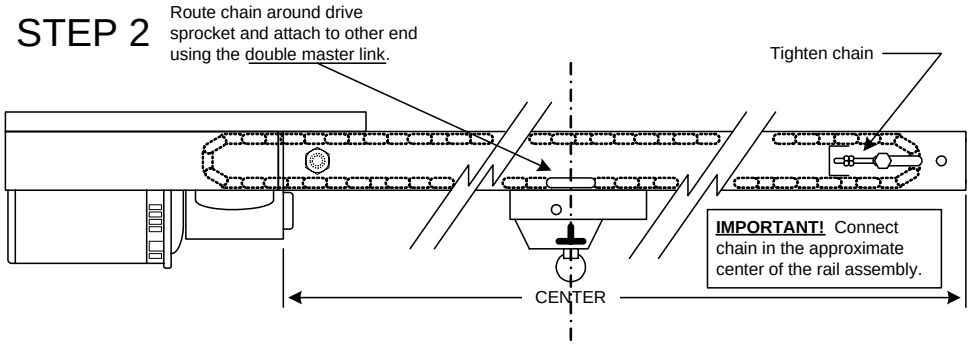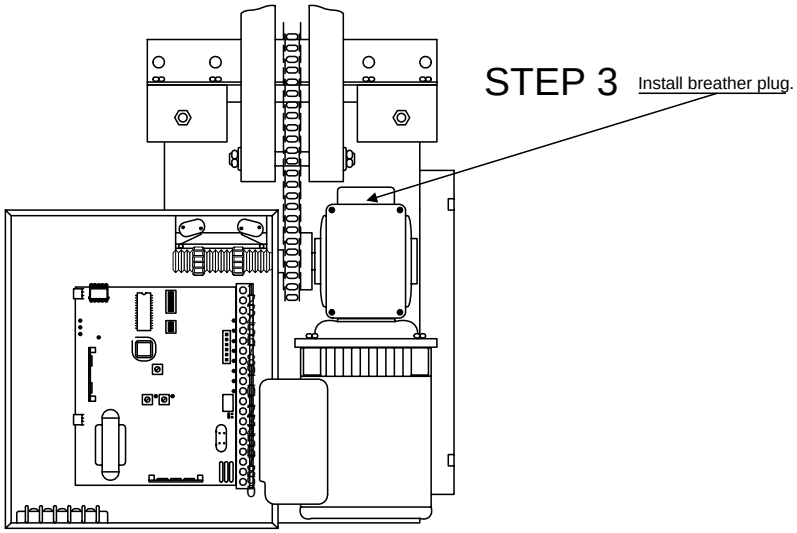Assembly Instructions
Model 1150 Operator