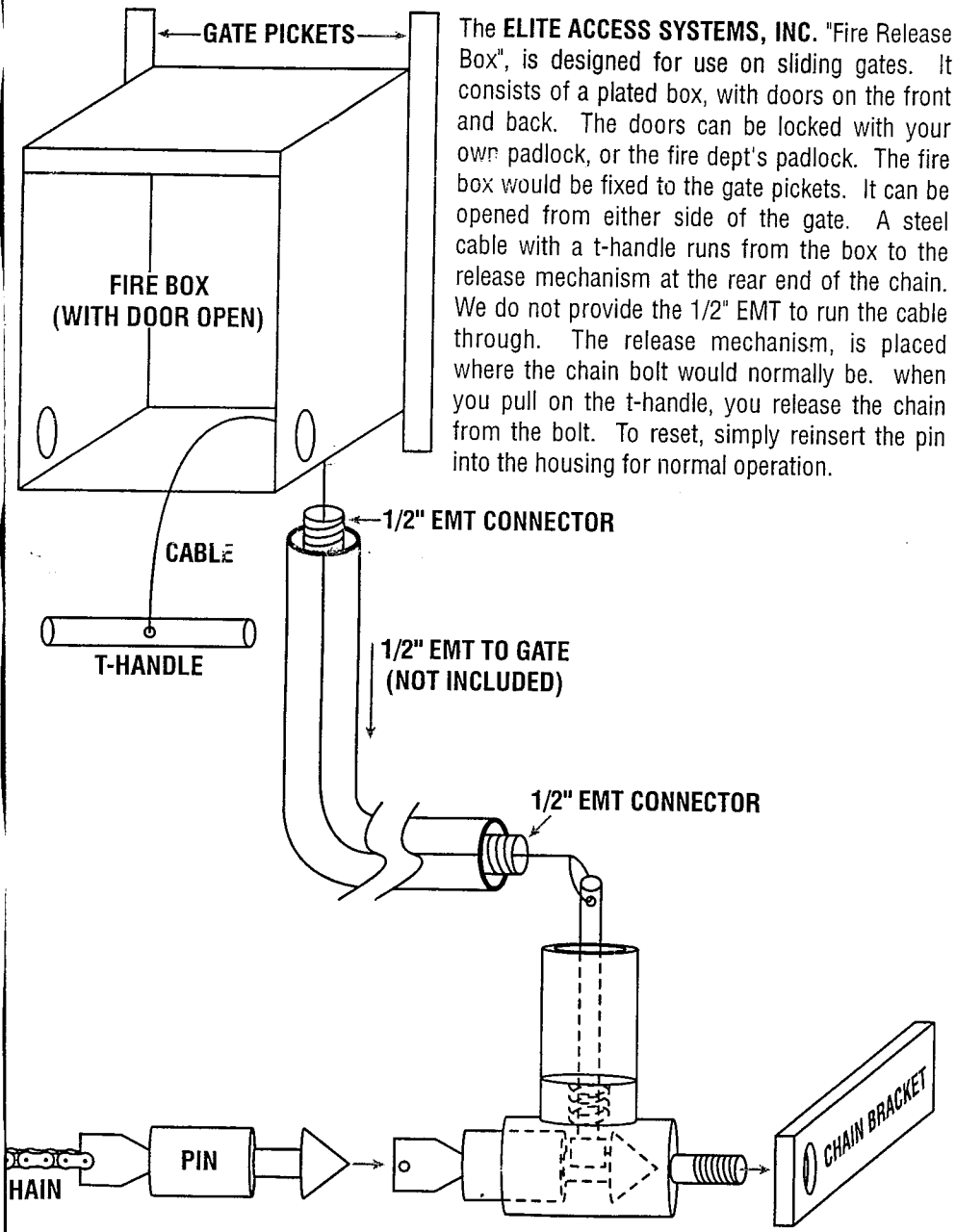

The **ELITE ACCESS SYSTEMS, INC.** "Fire Release Box", is designed for use on sliding gates. It consists of a plated box, with doors on the front and back. The doors can be locked with your own padlock, or the fire dept's padlock. The fire box would be fixed to the gate pickets. It can be opened from either side of the gate. A steel cable with a t-handle runs from the box to the release mechanism at the rear end of the chain. We do not provide the 1/2" EMT to run the cable through. The release mechanism, is placed where the chain bolt would normally be. when you pull on the t-handle, you release the chain from the bolt. To reset, simply reinsert the pin into the housing for normal operation.

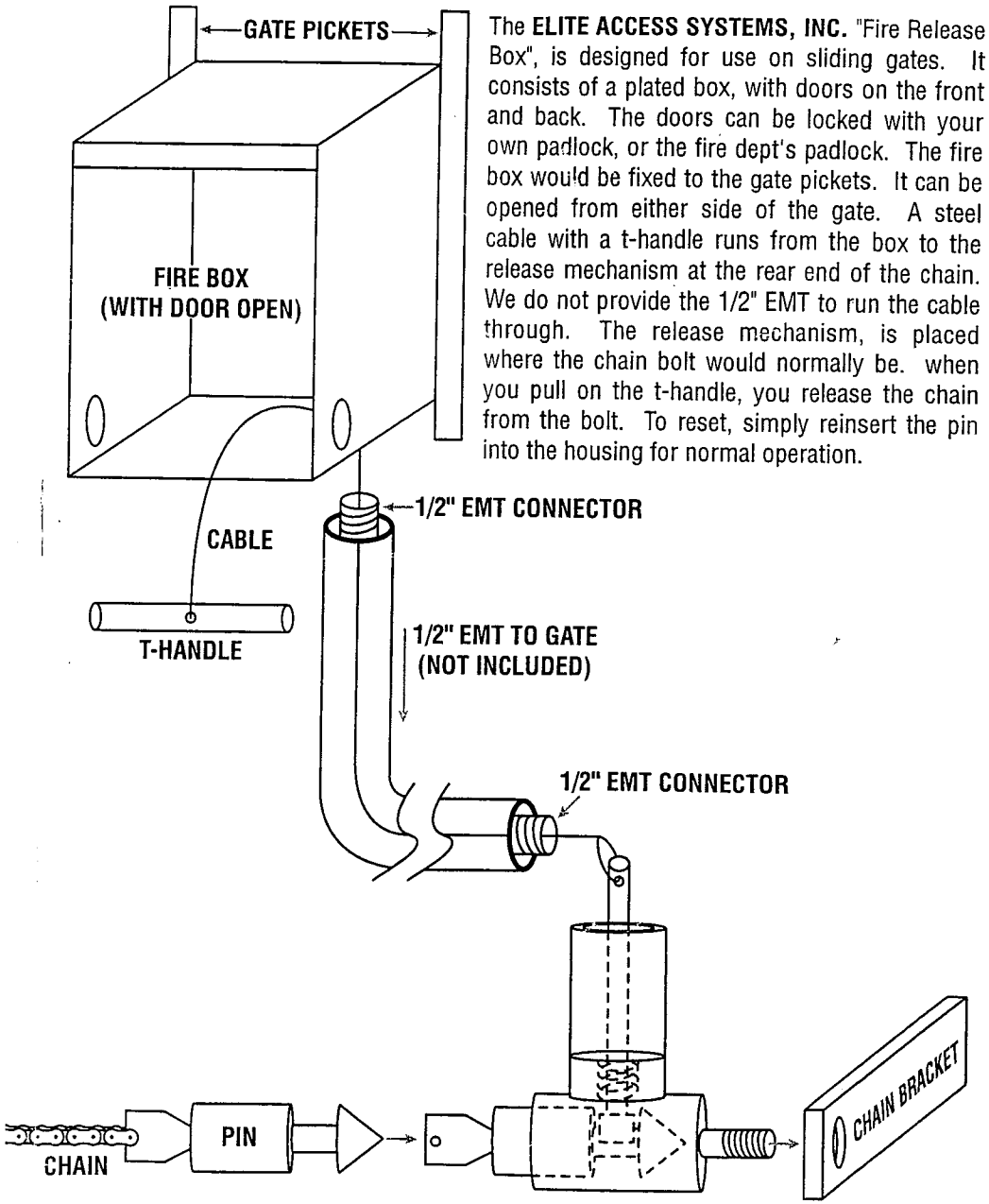

The **ELITE ACCESS SYSTEMS, INC.** "Fire Release Box", is designed for use on sliding gates. It consists of a plated box, with doors on the front and back. The doors can be locked with your own padlock, or the fire dept's padlock. The fire box would be fixed to the gate pickets. It can be opened from either side of the gate. A steel cable with a t-handle runs from the box to the release mechanism at the rear end of the chain. We do not provide the 1/2" EMT to run the cable through. The release mechanism, is placed where the chain bolt would normally be. when you pull on the t-handle, you release the chain from the bolt. To reset, simply reinsert the pin into the housing for normal operation.